Radaway SEYA 10 KDD II

RYSUNKI TECHNICZNE

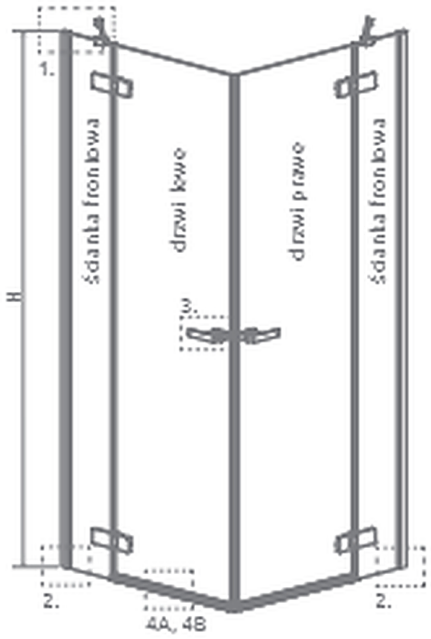

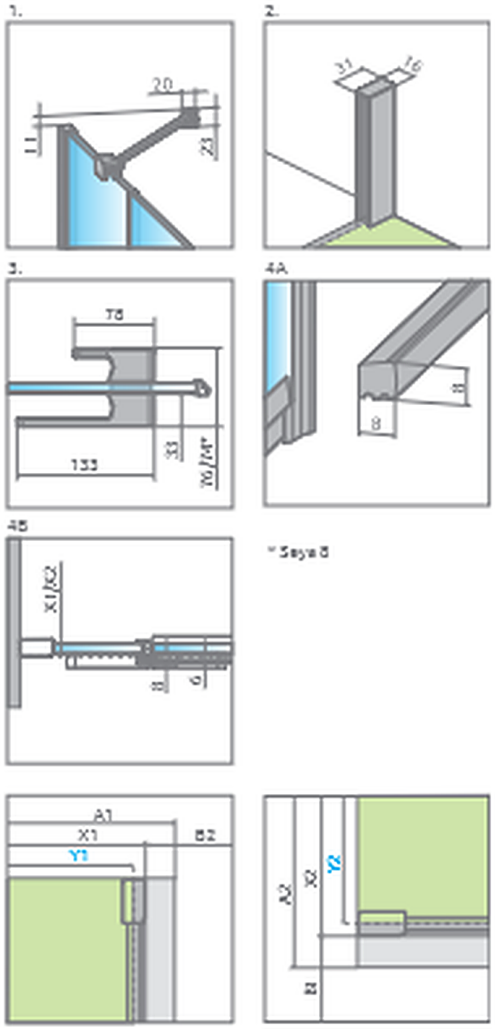

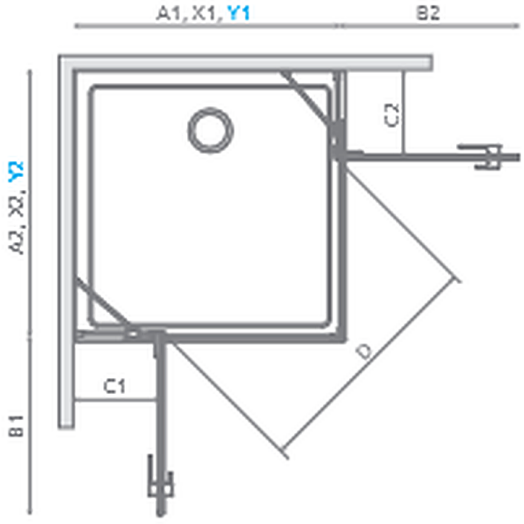

Wymiary [mm]

Model	Drzwi + scianka	A1/A2	X1/X2	Y1/Y2 SEYA 10	Y1/Y2 SEYA 8	B1/B2	C1/C2 SEYA 10	C1/C2 SEYA 8	H
KDD II 80 L/R	D50 + S30	800	775–790	767–782	768–783	493	277–292	279–294	2000
KDD II 90 L/R	D50 + S40	900	875–890	867–882	868–883	493	377–392	379–394	2000
KDD II 90 L/R	D60 + S30	900	875–890	867–882	868–883	593	277–292	279–294	2000
KDD II 100 L/R	D60 + S40	1000	975–990	967–982	968–983	593	377–392	379–394	2000

Drzwi L × Drzwi R	D [mm]
D50L × D50R	670
D50L × D60R	744
D60L × D50R	744
D60L × D60R	811