Radaway SEYA 10 KDJ II

Rysunki techniczne

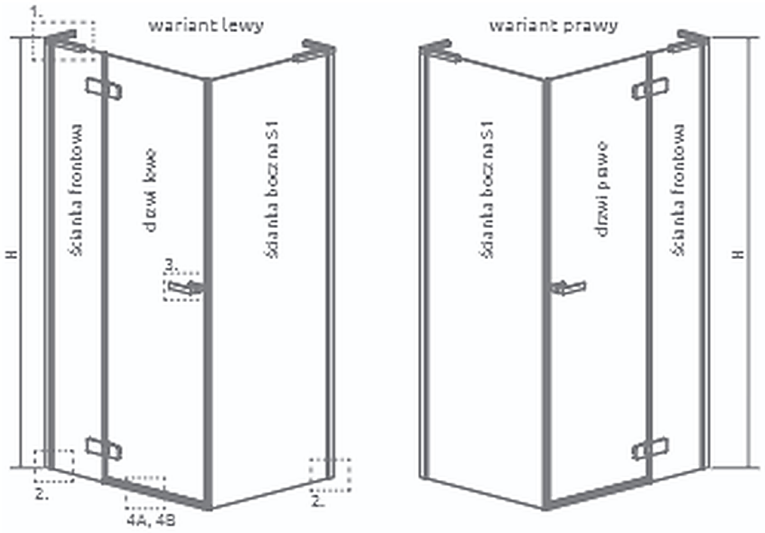

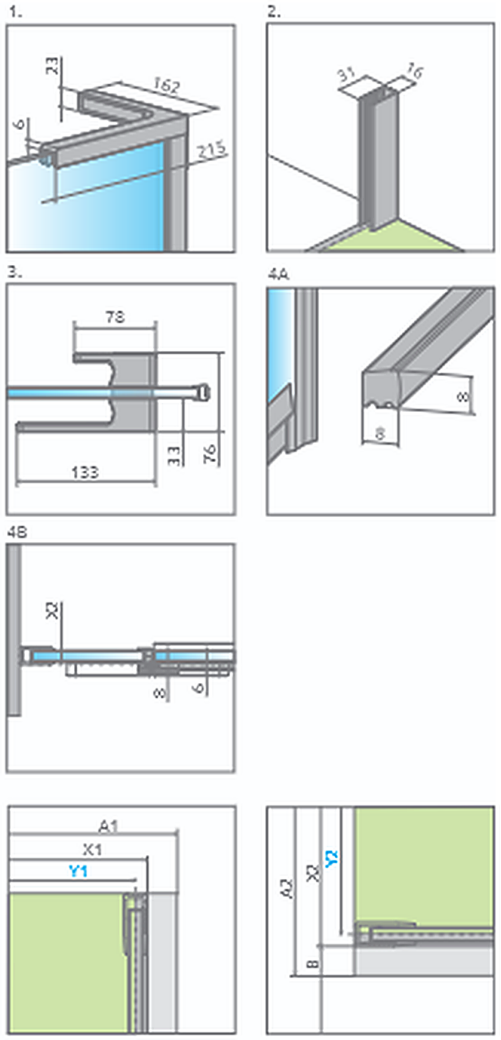

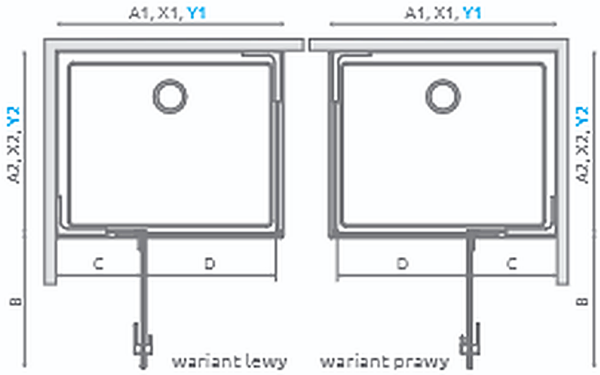

Front	Drzwi + Ścianka	A1	X1	Y1	B	C	D	H
KDJ II 80	D50 + S30	800	776–791	768–783	490	271–286	480	2006
KDJ II 90	D50 + S40	900	876–891	868–883	490	371–386	480	2006
KDJ II 90	D60 + S30	900	876–891	868–883	590	271–286	580	2006
KDJ II 100	D50 + S50	1000	976–991	968–983	490	471–486	480	2006
KDJ II 100	D60 + S40	1000	976–991	968–983	590	371–386	580	2006
KDJ II 100	D70 + S30	1000	976–991	968–983	690	271–286	680	2006
KDJ II 110	D60 + S50	1100	1076–1091	1068–1083	590	471–486	580	2006
KDJ II 110	D70 + S40	1100	1076–1091	1068–1083	690	371–386	680	2006
KDJ II 120	D70 + S50	1200	1176–1191	1168–1183	690	471–486	680	2006

Ścianka boczna S1	A2	X2	Y2
S1 70	700	676–691	668–683
S1 80	800	776–791	768–783
S1 90	900	876–891	868–883
S1 100	1000	976–991	968–983